Zambelis LIGHTS

Product Data Sheet

Code 22109

Color: Black Matt
Smoked Glass

Date: 13/11/2025
Zambelis Lights



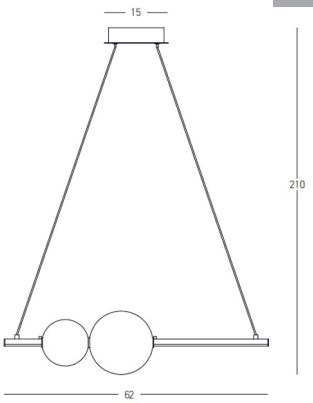

Physical Specifications

Luminaire Type	Indoor Pendant Lights
Color	Black Matt-Smoked Glass
Material	Aluminium - Glass - Acrylic
IP	20
Warranty	3 Years

Dimensions Reference

Overall Dimensions	L: 62cm W: 15cm H: 210cm
Base	L: 15cm W: 6.5cm H: 5.5cm
Glasses	Ø: 15cm + Ø: 10cm
Profile	Ø: 2cm
Cable & Wires	200cm Cable Adjustable
Cutting Hole	None
Depth Required	None

Illumination Data

Color Temperature	3000K
Cri	80
Lumen Output	1100Lm
Beam Angle	360° in a sphere
UGR	N/A
Energy Efficiency Class	E
Indicative Lifetime	L70B50 30000h
Mc Adam	SDCM<1.2

Electrical Specifications

Input Voltage	220-240V
Operating Frequency	50/60Hz
Power	13W
Supply Current	300mA
Voltage Copatibility	27-42VDC
Light Source	LED built in
Dimming Options	Triac
Safety Class	I

Packing Info

Package Size	L: 68cm W: 21cm H: 22cm
Gross Weight	1.51kg

Product Description

Pendant LED Line Light 13W 3000K Black Matt Smoked Glass Aluminium Acrylic

LED IP20 30K HOURS CRi80 DIMMABLE

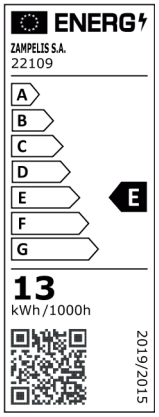

5 213010 019428

3 YEARS WARRANTY

www.zambelislights.gr | info@zambelislights.gr

Greece , Attica , Keratea , Kivouri | Postal Code: 19001 | P.O. Box: 4791
Tel.: (+30) 22990 63518-19 | Fax: (+30) 22990 63521

ANDROID APP ON Google play
Available on the iPhone App Store