MAYTONI
DECORATIVE LIGHTING

Floor lamp Marmo

Series: Marmo Article: MOD099FL-02G

PROPERTIES

Lamp type: ..... Floor lamp
Height, mm: 1600
Bulbs: ..... (40W)
Diameter, mm: 230

PLAFOND / LAMPSHADE

Lampshade Colour: ..... White
Shade Material: .....

ADDITIONAL
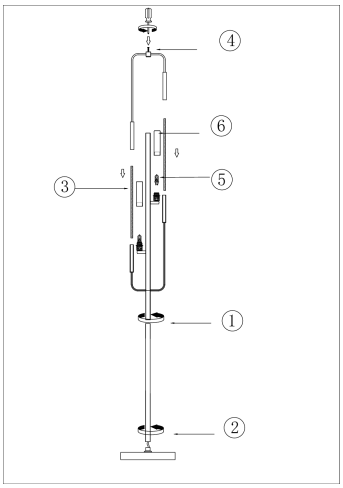
Light Socket: G9
Lamp power: 40
VOLTAGE: ..... AC220_240
Base material: ..... Metal
2in1: ..... No
LED: ..... No
Bulbs incl.: ..... No
Barcode: 4251110057057
IP: IP20
Package volume, m3: 0.041184
Net weight, kg: 6.5
Warranty: 2